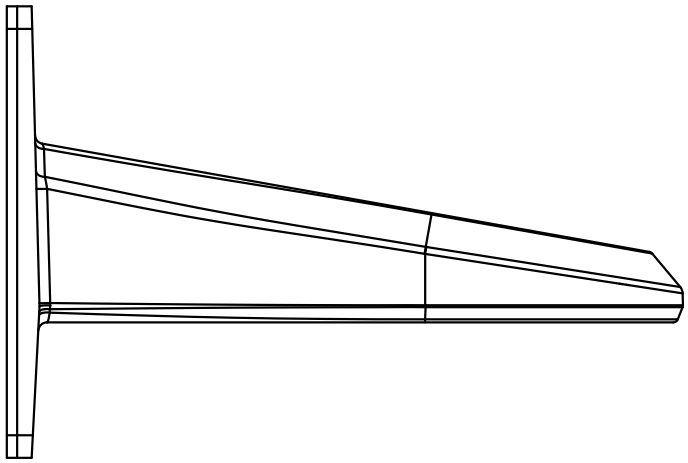

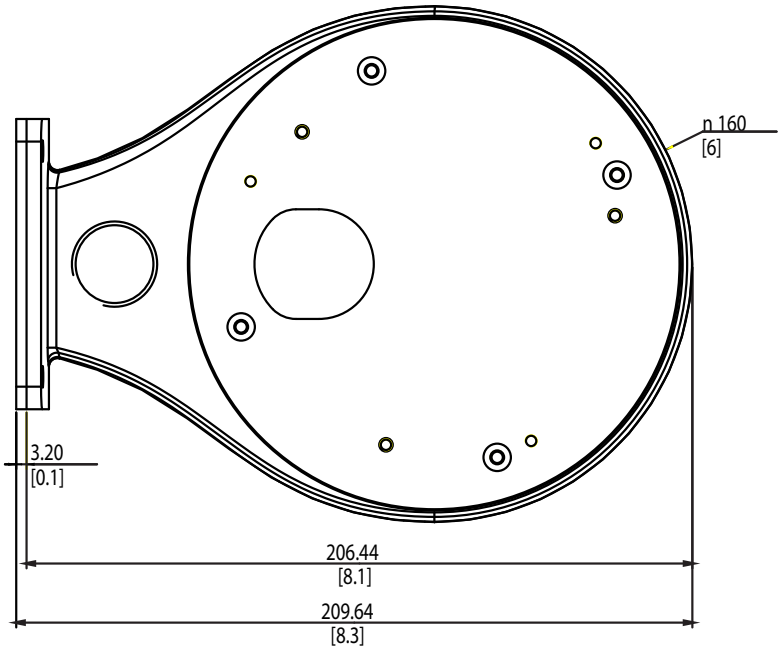
n 160
[6]
3.20
[0.1]
206.44
[8.1]
209.64
[8.3]

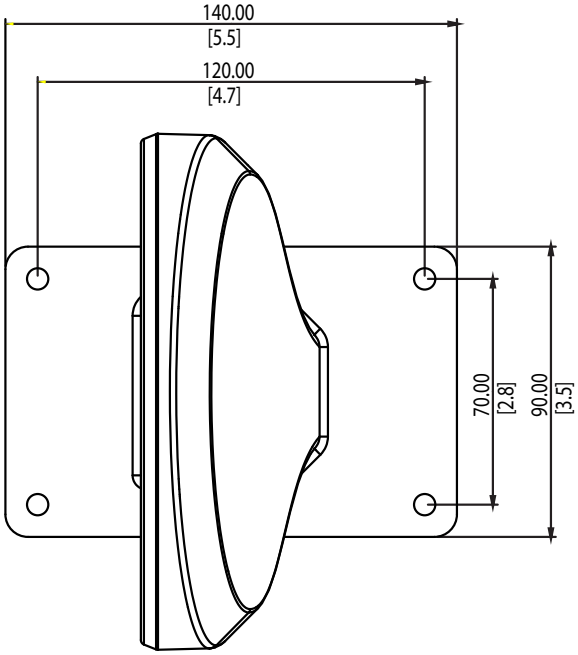
140.00
[5.5]
120.00
[4.7]
70.00
[2.8]
90.00
[3.5]